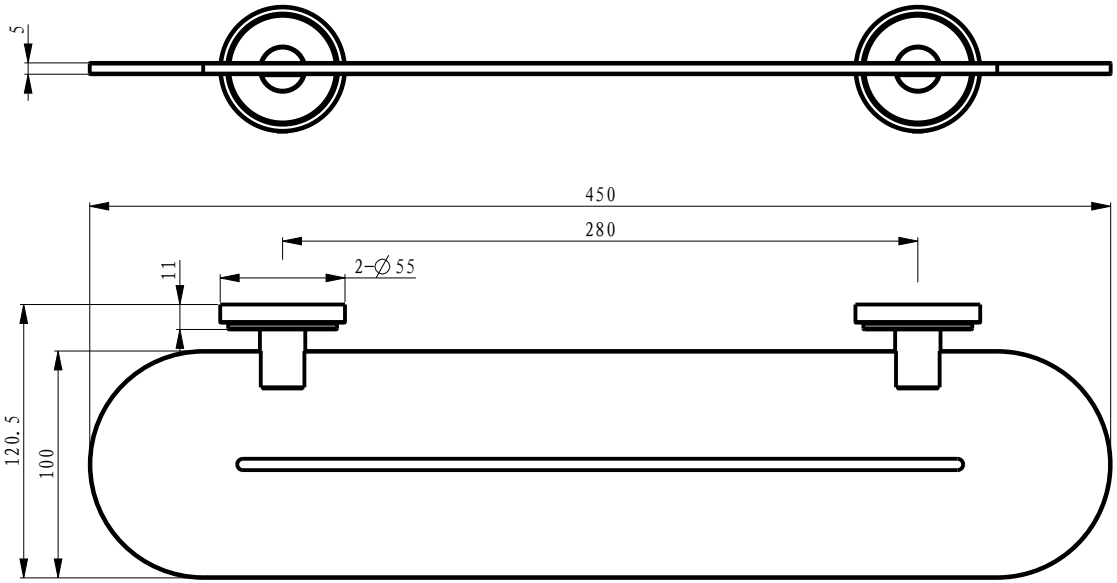
5
450
280
11
2-∅55
120.5
100