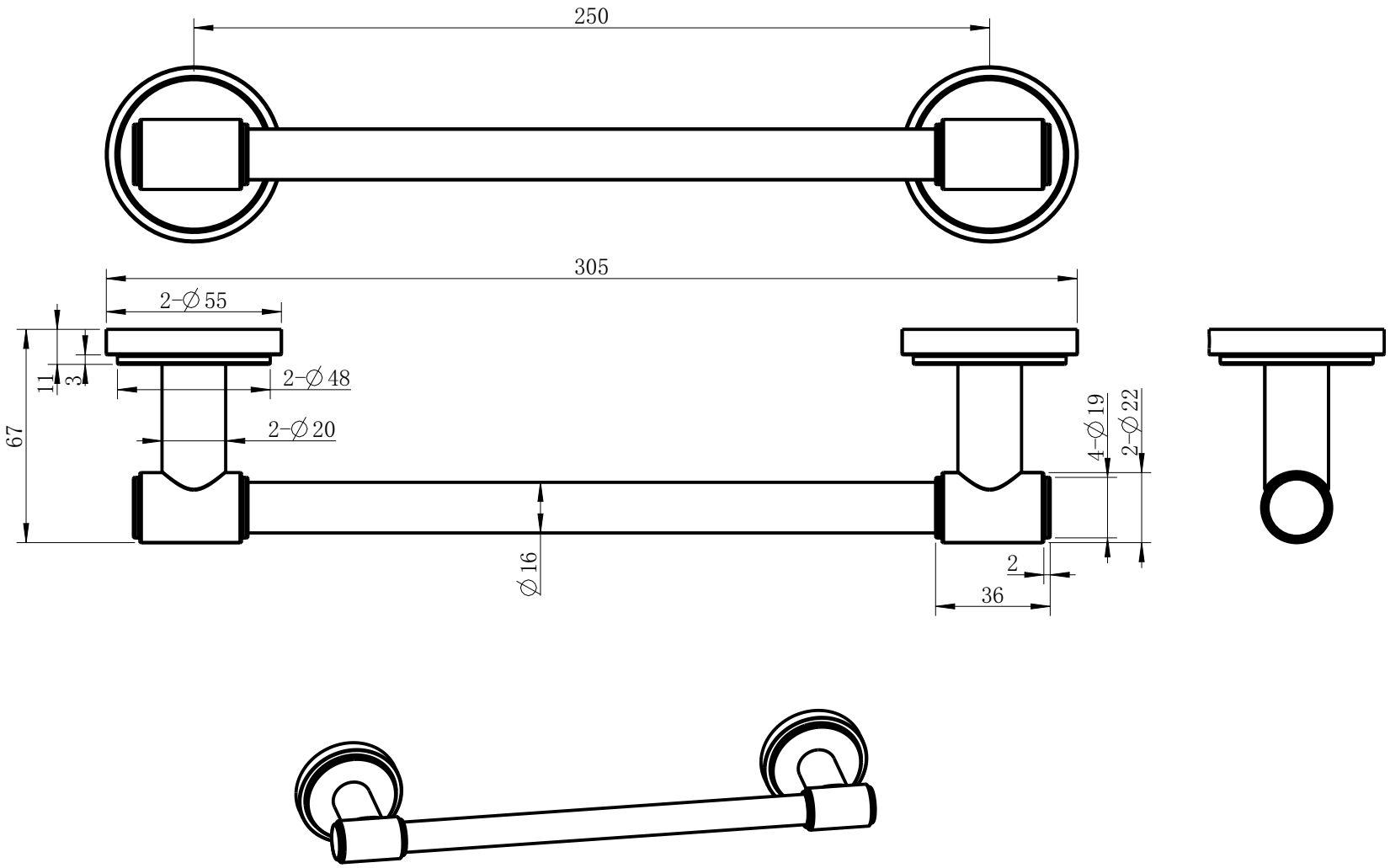
250
305
2-∅55
2-∅48
2-∅20
11
3
67
∅16
4-∅19
2-∅22
2
36