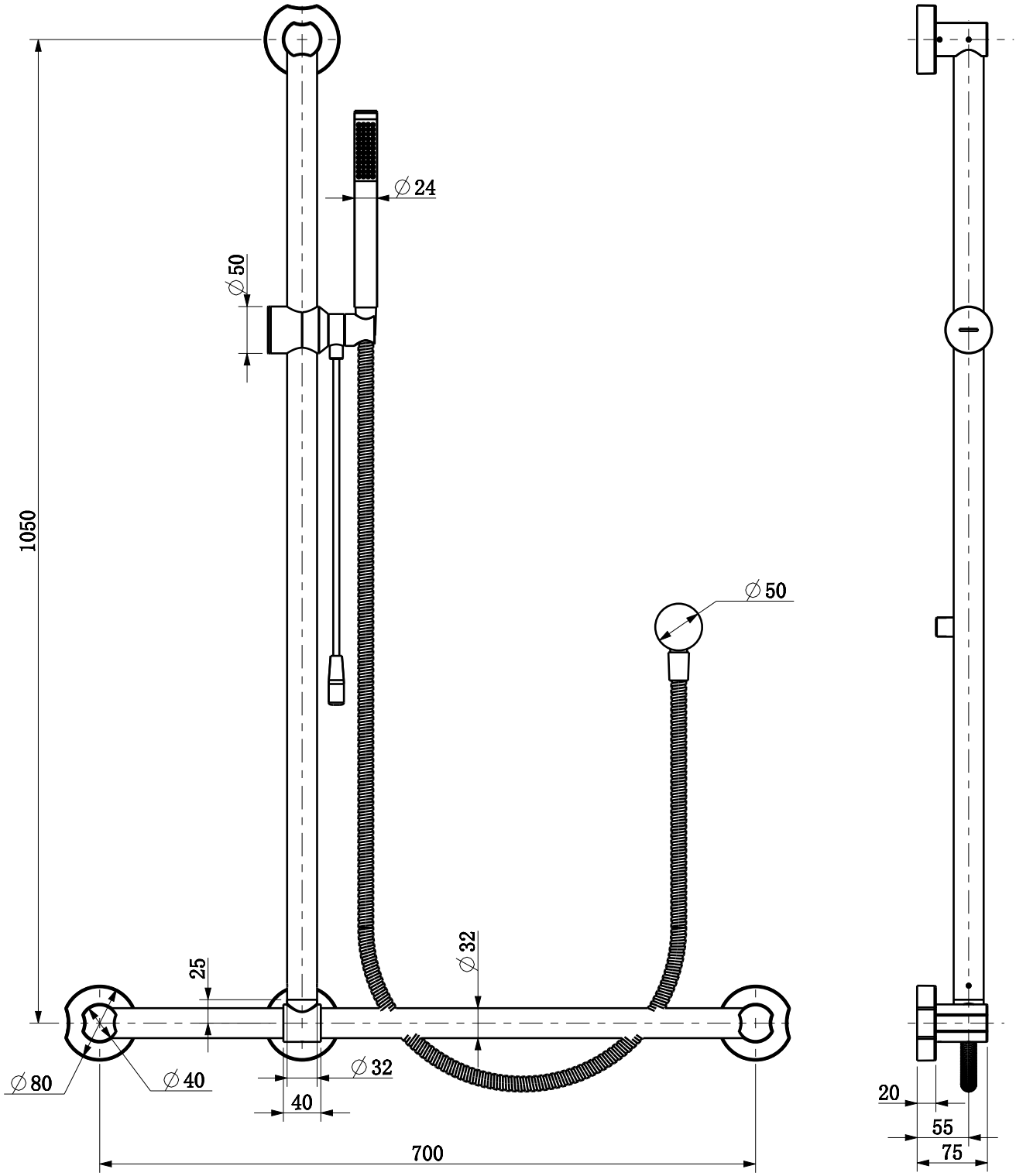
∅24
∅50
1050
∅50
25
∅32
∅80
∅40
∅32
40
700
20
55
75